A1 | TD-1189-1785 | A

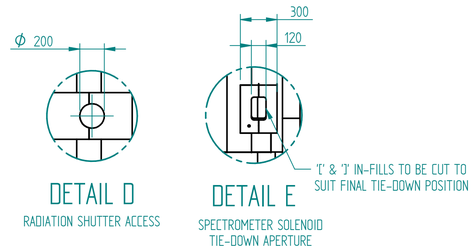

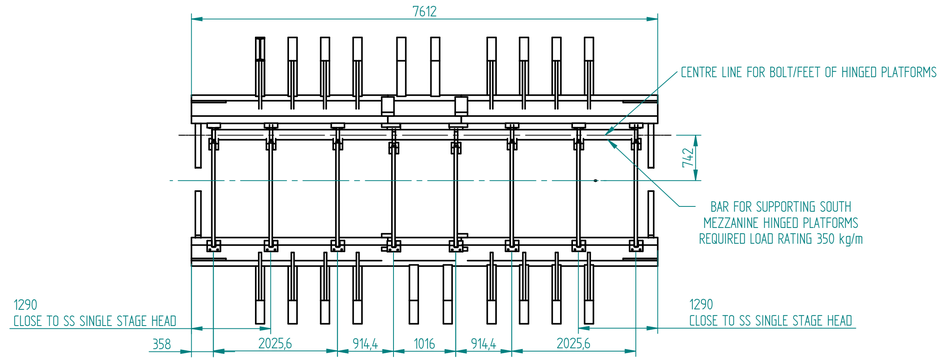

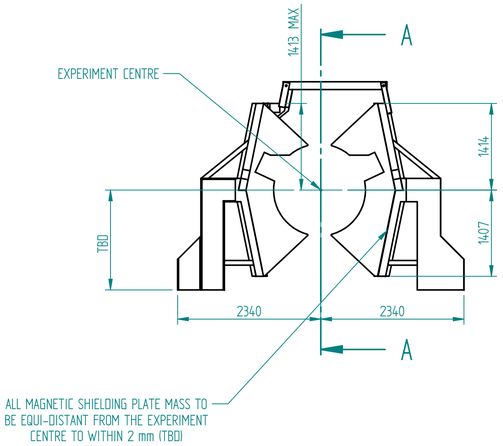

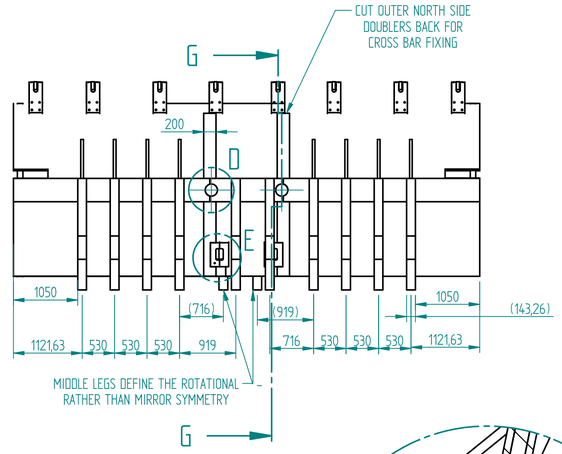

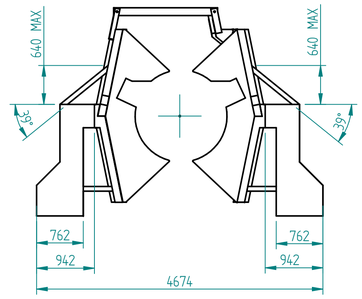

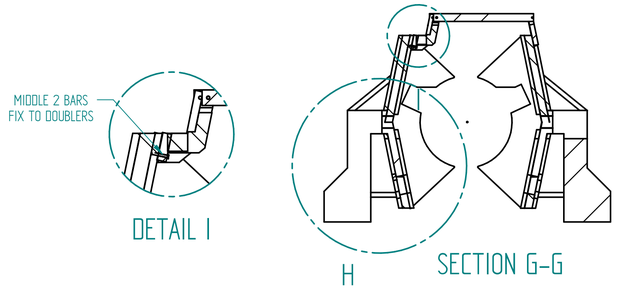

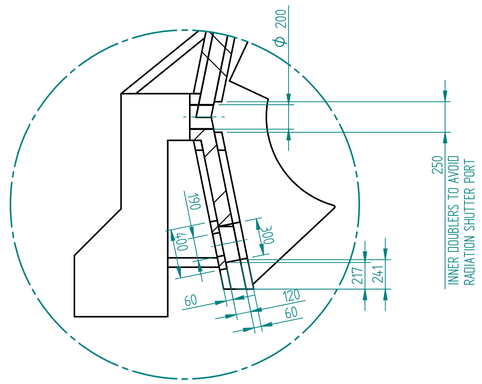

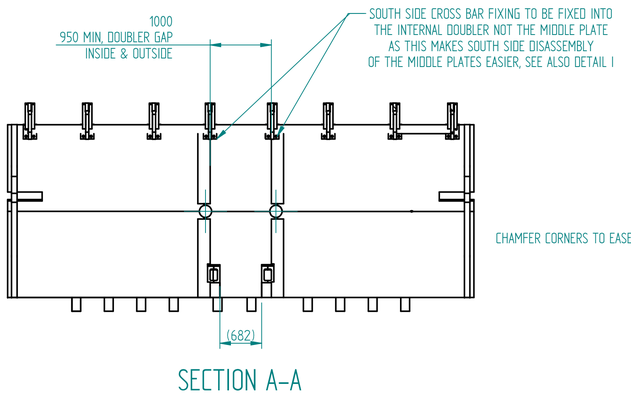

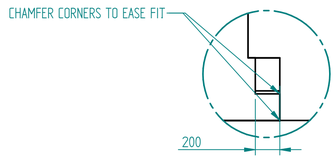

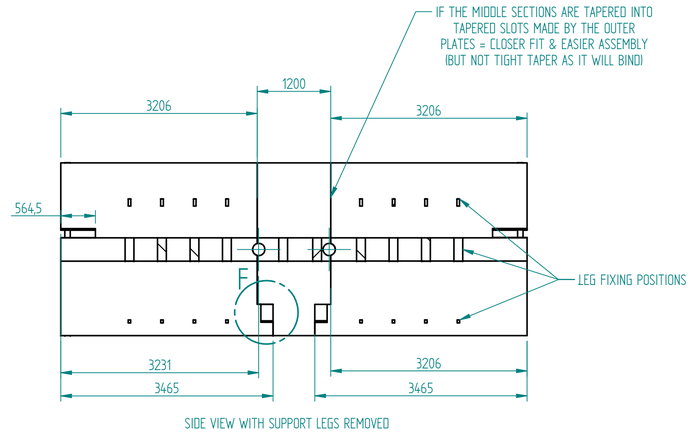

FOR DISCUSSION ONLY
DRAFT - 04/10/13

ISSUE	DATE APPD	MOD. No.	DRAWN BY	CHKD BY	APPD BY	STATUS
A	Error: No reference	Error: No reference	J S TARRANT	Error: No reference	Error: No reference	MANUFACTURE ONLY WHEN STATUS IS **RELEASED** — Error: No reference

© STFC 2013 — PROJECTION

TOLERANCES UNLESS STATED: LINEAR ± AS DRAWN; ANGULAR ± ---

SURFACE TEXTURE: N/A µm

DRAWING CONFORMS TO BS 8888 TOLERANCING ISO 8015

MATERIAL & SPEC. — MASS 0.000 kg

FINISH: N/A — REMOVE ALL BURRS

DIMENSIONS IN mm UNLESS STATED

PROJECTS & MECHANICAL ENGINEERING GROUP (RAL) — USED ON TD-1189-1784

HARWELL SCIENCE & INNOVATION CAMPUS, RUTHERFORD APPLETON LABORATORY, CHILTON, OXON, OX11 0QX

SIMPLE YOKE (NO FLOOR)
MICE INTEGRATION ENGINEERING

MICE TDR126

A1 | TD-1189-1785 | SHEET 1 of 1 | A

A1 | TD-1189-1785 | A